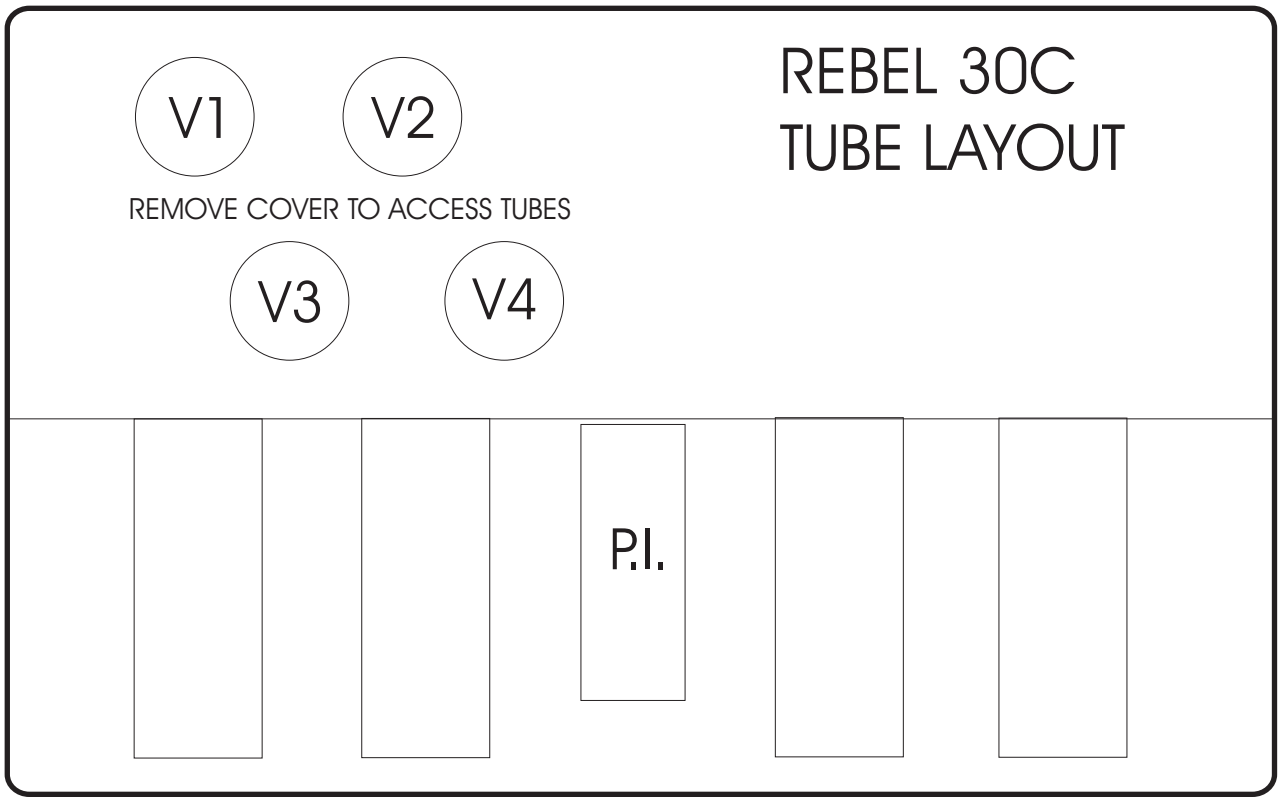
REBEL 30C
TUBE LAYOUT
V1
V2
REMOVE COVER TO ACCESS TUBES
V3
V4
P.I.

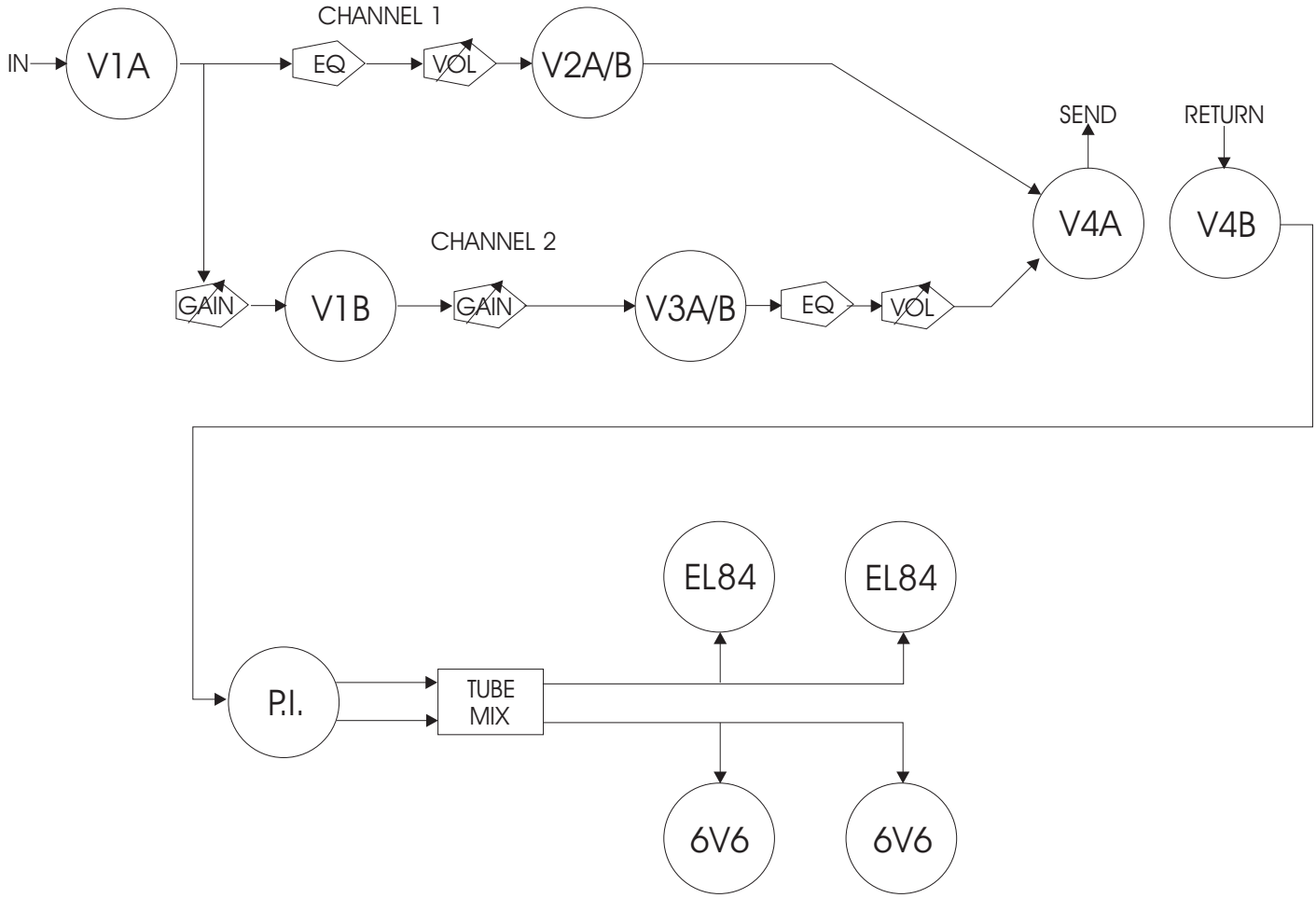
IN
V1A
CHANNEL 1
EQ
VOL
V2A/B
SEND
RETURN
V4A
V4B
CHANNEL 2
GAIN
V1B
GAIN
V3A/B
EQ
VOL
EL84
EL84
P.I.
TUBE
MIX
6V6
6V6